Viking 4G Steam Combi Jacketed Kettle

Viking 4G COMBI 60S (4224222)

Standard Features

- Kettle with integrated mixer
- 60 litre capacity
- Steam heated version
- Elevated control pillar with selected features
- Mixing speed control 20-110 rpm/min, autoreverse
- Two mixing programs
- Electric tilting – tilting height 600mm
- Auto tilt-back
- Safety grid lid
- Measuring stick
- Retractable handshower
- Strainer plate
- Stainless steel construction
- Unit shown includes free standing floor kit - other options available

Please refer to Moffat price list for options and accessories

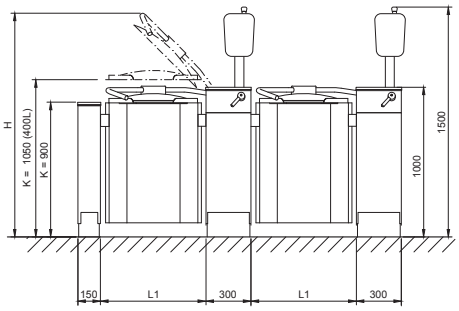

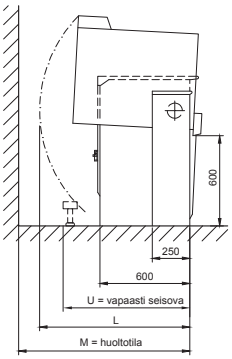

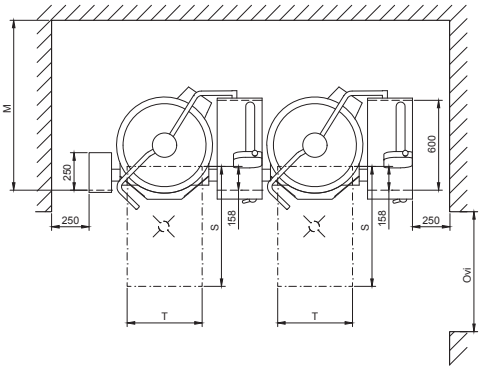

Technical Data

Net Volume	60 L
Spare Volume	8 L
Gross Volume	68 L
Dimensions	
Width	1047mm
Height	1500mm
Depth	706mm
Connections	
Water	Cold ø15mm Hot ø10mm
Steam	R ¾" 18 kg/hr
Cond. Outlet	R ½"

Electrical	Power 2.2 kW Voltage 230V, 1P+N+E 50/60Hz AMP 10A
Total Heat	10.5kW
Load	Latent 0.6 kW, Sensible 2.6 kW
Waste	By kitchen contractor
Nett Weight	205 kg

Model	L1 mm	H mm	L mm	M mm	U mm	T mm	Door mm
60S	**597**	**1740**	**870**	**1055**	**860**	**400**	**800**

Australia
moffat.com.au

Moffat Pty Limited
740 Springvale Road
Mulgrave
Victoria 3170
Australia
Telephone +613-9518 3888
Facsimile +613-9518 3833
vsales@moffat.com.au

New Zealand
moffat.co.nz

Moffat Limited
45 Illinois Drive
Izone Business Hub
Rolleston 7675
New Zealand
Telephone +64 3-983 6600
Facsimile +64 3-983 6660
sales@moffat.co.nz

24:7 Service Support

Disclaimer: All unit capacities are based on subjective testing. Moffat accepts no liability for production values. In line with policy to continually develop and improve its products, Moffat Limited reserves the right to change specifications and design without notice.

© Copyright Moffat Ltd
AN-MET-S-2001

WA DEALER
PRACTICAL PRODUCTS PTY LTD

PH: 08 9302 1299
51 Paramount Dr Wangara WA 6065
sales@practicalproducts.com.au
www.practicalproducts.com.au

an Ali Group Company

The Spirit of Excellence