Viking 4G Electric Static Jacketed Kettle

Viking 4G 200E (4224110)

Standard Features

- 200 litre capacity
- Electric heated version
- Elevated control pillar with selected features
- Electromechanical controls
- Stepless temperature control
- Electric tilting – tilting height 600mm
- Auto tilt-back
- Measuring stick
- Retractable handshower
- Strainer plate
- Stainless steel construction
- Unit shown includes free standing floor kit - other options available

Please refer to Moffat price list for options and accessories

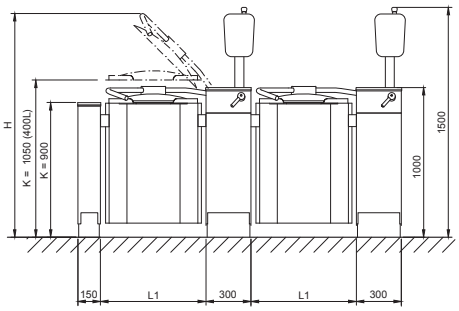

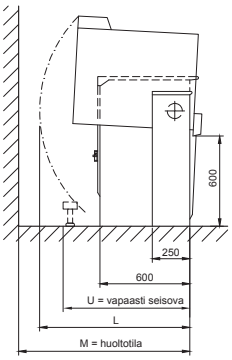

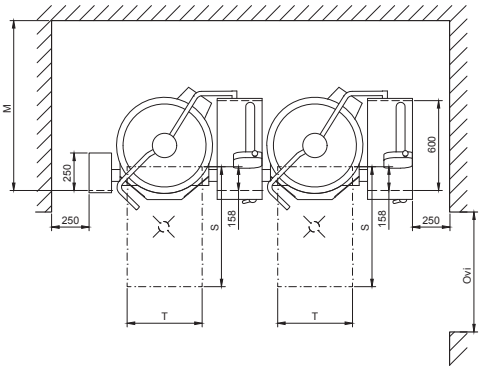

Technical Data

Net Volume	200 L
Spare Volume	19 L
Gross Volume	219 L
Dimensions	
Width	1360mm
Height	1500mm
Depth	880mm
Connections	
Water	Cold ø15mm Hot ø10mm

Electrical	Power 30 kW Voltage 400-415V, 3P+N+E 50/60Hz AMP 50A
Total Heat	30 kW
Load	Latent 1.4 kW, Sensible 6.1 kW
Waste	By kitchen contractor
Nett Weight	290 kg

Model	L1 mm	H mm	L mm	M mm	U mm	T mm	Door mm
200E	**910**	**1945**	**1075**	**1170**	**1110**	**600**	**1000**

WA DEALER
PRACTICAL PRODUCTS PTY LTD

PH: 08 9302 1299
51 Paramount Dr Wangara WA 6065
sales@practicalproducts.com.au
www.practicalproducts.com.au